Generalized Detector with Adaptive Detection Threshold for Radar Sensors

Modar Safir Shbat
College of IT Engineering, Electronic Engineering School
Kyungpook National University
Daegu, South Korea
e-mail: modboss80@knu.ac.kr

Vyacheslav Tuzlukov
College of IT Engineering, Electronic Engineering School
Kyungpook National University
Daegu, South Korea
e-mail: tuzlukov@ee.knu.ac.kr

Abstract—**Radar sensors are an attractive technology for different kinds of applications, especially, in the case of safety driving systems. This research deals with designing the target return signal detection algorithm for radar sensors using the generalized detector (GD) with adaptive detection threshold based on a sliding window technique to estimate the noise power. The general GD structure is introduced, and the proposed method to define the adaptive detection threshold is assumed to be employed by 24 GHz frequency modulation continuous wave (FMCW) radar sensor and the simulation results show the better detection performance in comparison with the cell averaging constant false alarm rate (CA-CFAR) detector one which is widely used by radar sensor systems for car applications.**

Keywords: generalized detector (GD); adaptive detection threshold; noise power estimation; radar sensor system.

I. INTRODUCTION

Recently, the total safety driving approach has been become very popular and achieved by integrating environmental sensors to build a system of passive and active vehicle safety elements. The main problem in any radar sensor system is to detect the target return signal within the limits of system scanning area. The signal detection would be an easy task if the signal is observed under statistically known noise and interference which is not a general case in practice. Adaptive detection of target return signal is required to employ a variable detection threshold in the receiver as a function of time and in accordance with locally observed changes in the noise power.

The generalized detector (GD) is constructed based on the generalized approach to signal processing in noise [1]. GD is constructed based on a combination of the Neyman-Pearson (NP) detector that is optimal for detection of signals with known parameters, and the energy detector that is optimal for detection of signals with unknown parameters. The idea to use the 24 GHz linear frequency modulation continuous wave (LFMCW) radar sensor system with GD for safety driving application such as closing vehicle detection (CVD) and blind spot detection (BSD) is introduced in [2], and [3].

In this paper, the general GD structure is explained in details, and an adaptive detection threshold is derived for GD and formulated by following two procedures. The first procedure deals with defining the GD threshold that can be adopted for the recommended radar sensor system, and the second procedure deals with presenting an appropriate noise power estimation method to be employed for changing the detection threshold adaptively with the noise power. The proposed noise power estimation method depends on sliding window technique which is simple, effective, and suitable to be used by the GD. The GD performance with a new concept of the adaptive threshold is compared with the detection performance of the cell averaging constant false alarm rate (CA-CFAR) detector [4] which is well know and widely used in car applications. The comparative analysis demonstrates the better GD performance over the CA-CFAR detector under the same initial conditions.

II. GD STRUCTURE

The physical and technical realization of the generalized approach to signal processing in noise can be presented by GD flowchart shown in Fig. 1. The additional filter (AF) is the source of reference noise, and the resonance frequency is detuned relatively to that of the preliminary filter (PF). The value of detuning between the AF and PF should be more than 4~5 times the signal bandwidth (Δf_a) in order to consider the processes at the two filters output as independent and uncorrelated (the correlation coefficient is not more that 0.05). The model signal generator (MSG) generates the model signal $a^*(t)$ (local oscillator). The threshold apparatus (THRA) defines the GD threshold, and the signal model generator switching apparatus (SGSA) is used to switch on the MSG to define the unknown parameters of detected signal. The decision block (DB) with the decision function $\varphi(\alpha)$ defines a decision-making rule under signal detection. The switch K1 takes the position 1 to define the detection threshold K_g and takes the position 2 after threshold definition and the target return signal is detected. The switch K2 works to put the THRA in and out of service.

Let $X(t)$ be the input stochastic process observed within the limits of the time interval [0,T], $a(t)$ is the target return

978-1-61284-1438-2/12/$26.00 ©2012 IEEE

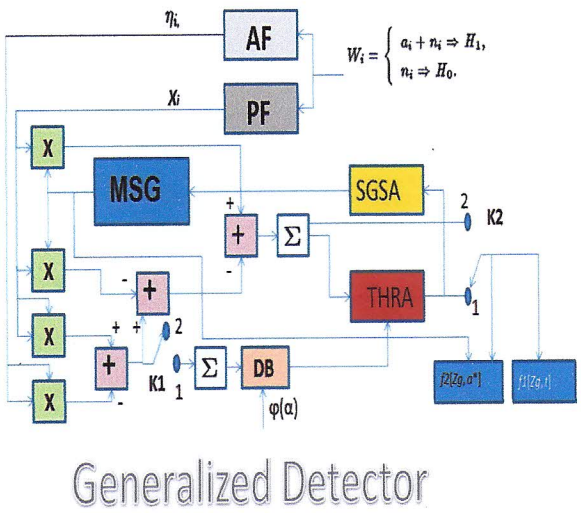

Figure 1. The main structure of the generalized detector.

signal. In practice, to permanently maintain a physical sense of signal detection technique, the signal $a(t)$ should be replaced by its model $a^*(t)$ formed at the receiver and defined as

$$a^*(t) = ka(t), \tag{1}$$

where k is the coefficient of proportionality. Based on the input stochastic samples ($X_1,...,X_N$) at the output of PF and the reference sample at the output of AF ($\eta_1,...,\eta_N$), the generalized signal detection algorithm can be presented in the following form:

$$\sum_{i=1}^{N} 2X_i a_i^* - \sum_{i=1}^{N} X_i^2 + \sum_{i=1}^{N} \eta_i^2 \quad \begin{matrix} > K_g \Rightarrow H_1 \\ < K_g \Rightarrow H_0 \end{matrix} \tag{2}$$

In (2), the first term corresponds to the Neyman-Pearson detector with twice the gain, and is considered as a sufficient statistic of the mean. The second term corresponds to the energy detector connected with the PF, and is considered as a sufficient statistic of the variance. The third term corresponds to the reference noise formed at the output of energy detector connected with the AF, and K_g is the GD threshold.

In the case of the hypothesis H_1 when $X_i = a_i + \zeta_i$, the left side of (2) will take the form $\sum_{i=1}^{N} a_i^2 + \sum_{i=1}^{N} \eta_i^2 - \sum_{i=1}^{N} \zeta_i^2$ and it is well known that $\sum_{i=1}^{N} a_i^2 = E_a$ is the signal energy, and $\sum_{i=1}^{N} \eta_i^2 - \sum_{i=1}^{N} \zeta_i^2$ is the background noise formed by two linear systems (AF and PF). The background noise is a difference between the noise power forming at the PF and AF outputs. In the opposite case, when $X_i = \zeta_i$ (under the hypothesis H_0), the left side of the (2) takes the form of the background noise only. Thus, the received signal and noise can be appeared at the PF output and only the reference noise is appeared at the AF output. If the Gaussian noise comes in the AF and PF inputs, the noise forming at the AF and PF outputs is Gaussian too, because these two filters are linear systems.

III. Threshold Definition and Noise Power Estimation Technique

A. GD Threshold Definition

The probability of false alarm P_{FA} should be adjusted to provide an acceptable number of false alarms within a given period called the false alarm time T_{FA}. Thus, the P_{FA} is defined under the hypothesis H_0 in the following simple form:

$$P_{FA} = P(V \geq K_g), \tag{3}$$

where $V = V(t)$ is the noise power defined at a specific time, and $P(V \geq K_g)$ is the probability of the event when the noise power at the GD output exceeds the GD threshold under the hypothesis H_0.

Based on the knowledge about the noise parameters and probability distribution function (pdf), there are two major cases: 1) the first case when the noise is a random variable with a known pdf; 2) the second case when the noise is a random variable with an unknown pdf. Among these two mentioned cases, the first case is of interest to define the GD threshold, because the noise pdf at the GD input is known, and the background noise pdf at the GD output can be determined or measured. Under the hypothesis H_0 (no signal) the pdf at the GD output $p(x;H_0)$ (the background noise pdf), when the noise $n(t)$ at the GD input is the narrow-band with Rayleigh amplitude envelope and uniform random phase within the limits of the interval $[0,2\pi]$, can be presented in the following form:

$$p\ (x;H_0) = \begin{cases} \dfrac{1}{4\sigma_n^2}\exp\left(-\dfrac{|x|}{2\sigma_n^2}\right), & x \geq 0 \\ 0, & x < 0 \end{cases} \tag{4}$$

where σ_n^2 is the noise variance at the GD input. The probability of false alarm P_{FA} can be presented in the following form:

$$P_{FA} = \int_{K_g}^{+\infty} p(x;H_0)dx = \frac{1}{2}\exp\left(-\frac{K_g}{2\sigma_n^2}\right), \tag{5}$$

where K_g is the GD threshold and can be determined as

$$K_g = -2\sigma_n^2 \ln 2P_{FA}. \tag{6}$$

If the scaling factor is used, the modified GD threshold is given by:

$$K_g = \sigma_n^2 T, \tag{7}$$

where $T = -2\ln 2P_{FA}$ is the scaling factor and we can write:

$$P_{FA} = \frac{1}{2}\exp\left(-\frac{T}{2}\right). \tag{8}$$

The last equation allows us to determine the probability of false alarm P_{FA} for a given scaling factor T or, more likely, to determine the required value of T for the desired P_{FA}.

B. *Noise Power Estimation Based on Sliding Window Technique*

This simple and effective estimation method is based on the sliding widow technique. The estimator contains a number of reference cells equals to N, the available data (in GD case, the noise sample at the AF output) in the reference cells is performed by a special algorithm to define the estimated noise power. Under this approach, the average noise power is obtained by processing the reference cells (cell averaging technique). This technique is widely adopted by the CFAR detectors (see Fig. 2). It is important to mention that this technique works under the assumption of independent and identically distributed (iid) noise sample in the reference cells of the sliding window. In estimation technique, the estimated value of the noise power by processing the noise samples $\eta_1,\ldots,\eta_N$ can be presented by the following form:

$$\hat{\sigma}_n^{\,2} = \frac{1}{N}\sum_{n=1}^{N}\eta_n^2. \tag{9}$$

The GD threshold after noise power estimation can be easily defined as

$$K_g = T\hat{\sigma}_n^{\,2}. \tag{10}$$

The number of reference cells N in the sliding window can affect the accuracy of the noise power estimation, small N leads to poor performance and big estimation error, and large N cannot generate a considerable improvement in estimation quality with small estimation error. The estimation error variance allows us to measure fluctuations in the noise power tracking.

IV. Simulation Results

Figure 3 presents the basic GD output signals. The top signal diagram is the background noise at the GD output when there is no target return signal at the GD input. The middle signal diagram presents the GD energy detector output when there is the target return signal and we can find a shift toward

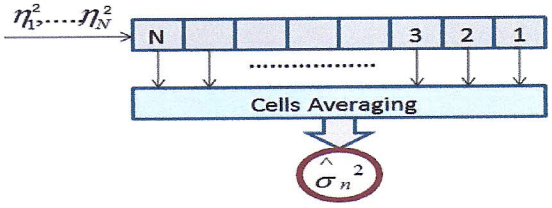

Figure 2. Cell averaging in sliding window technique.

the negative region on the amplitude axis. The CA-CFAR and GD detectors are compared in the receiver of ultra wide band (UWB) LFMCW radar sensor system where the bandwidth $B = 600$ MHz, the operation frequency of the radar sensor $f = 24$ GHz (this 24 GHz LFMCW radar sensor is widely used for middle range and short range radar MRR/SRR applications), the modulation time is 0.0625 sec which means that the up-sweep time equals to 0.03125 sec. The LFMCW radar sensor transmitted and received signals are shown in Fig. 4. The instantaneous transmitted frequency $f_T(t)$ can be presented in the following form:

$$f_T(t) = \begin{cases} f_c + \dfrac{B}{0.5T_m}t, & 0 < t < 0.5T_m \\ f_c - \dfrac{B}{0.5T_m}t, & 0.5T_m < t < T_m, \end{cases} \tag{11}$$

where f_c is the radar sensor operation frequency, B is the transmitted waveform bandwidth (the sweep bandwidth), and T_m is the sweep time. Detection performance comparison is made between the GD and CA-CFAR detector which is well known to have the best detection performance among all CFAR techniques [5]. The probability of false alarm P_{FA} is set to be constant and equals to 10^{-3}, the initial conditions for both detectors are exactly the same for fair comparison, the number of reference cells for noise power estimation in both detectors are also the same and set to be $N = 20$, and finally, the number of observations $M = 1000$.

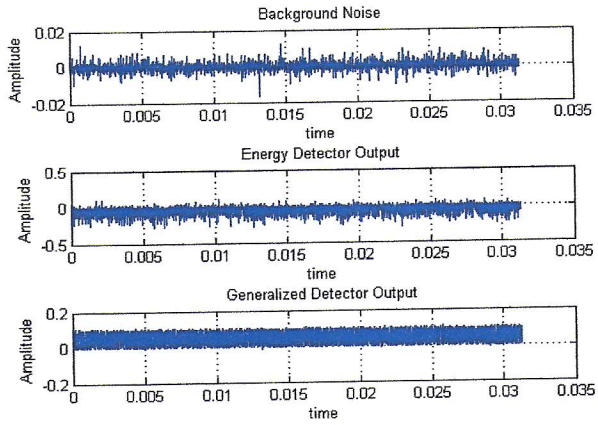

Figure 3. Basic GD output signals.

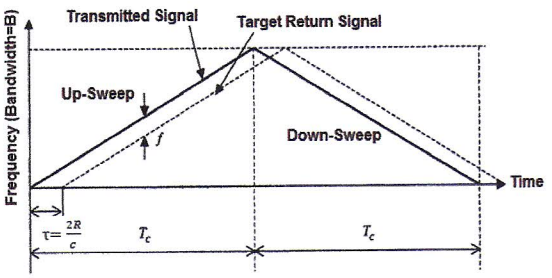

Figure 4. LFMCW radar sensor transmitted and received signals.

The probability of detection P_D is defined as the ratio between the number of observed components that exceed the threshold K and the total number of observations:

$$P_D = \frac{K}{M}. \tag{12}$$

Comparison in Fig. 5 is made when there is no any noise estimation procedure for GD [4], assuming that the noise power is known. In Fig. 6, the comparison is carried out after applying the proposed noise power estimation procedure for GD. When $P_D = 0.1$ and less which is not acceptable probability of detection for any kind of applications, or considered as non operational region, the performance of the CA-CFAR detector is better, but for $P_D > 0.1$, the GD shows the better detection performance for wide range of SNR values (until $P_D = 0.95$ approximately), for example, a P_D equals to 0.8, the required SNR in the case of CA-CFAR detector is 15 dB, but in the case of GD, it is almost 13 dB. For very high SNR values, both detectors have almost the same detection performance.

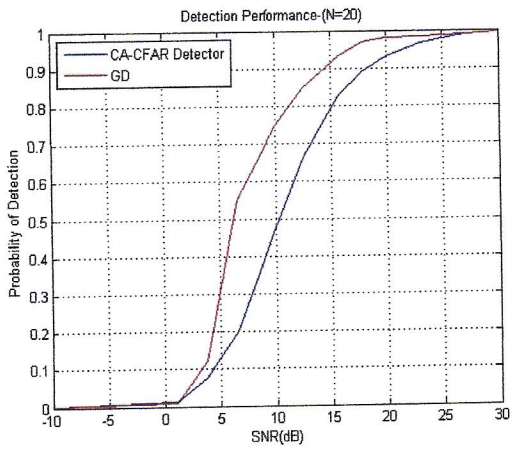

Figure 5. Detection performance comparison (GD without noise power estimation).

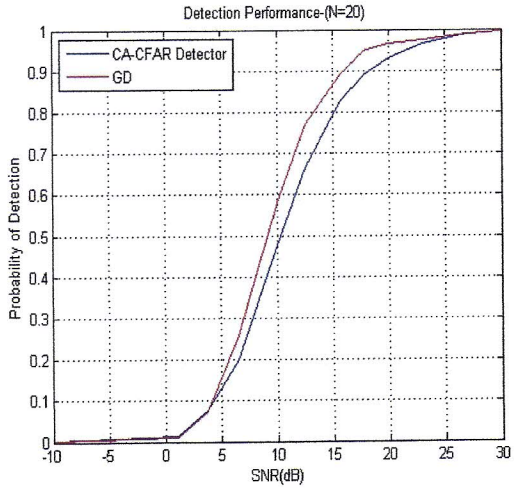

Figure 6. Detection performance comparison.

V. CONCLUSIONS

The target return signal detection techniques that depend on threshold detection have a common disadvantage with respect to the sensitivity of noise power changes. The detection threshold should be defined based on locally observed noise power when the noise variance is variable. Thus, the adaptive detection threshold is essential in order to maintain a constant probability of false alarm. The GD with the proposed noise power estimation technique to determine the detection threshold shows the better detection performance in comparison with the CA-CFAR detector, and promises a higher probability of detection under the same initial conditions for both detectors. Applying another noise power estimation techniques and improving the estimation quality (smaller estimation error) help the GD to achieve the best detection performance.

REFERENCES

[1] V. Tuzlukov, Signal Detection Theory, Birkhauser, Boston, 2001.

[2] M. S. Shbat, and V. Tuzlukov,"Signal processing in automotive controller area network based on radar sensors," in Proc. 2011 11th International Conference on Control, Automation, and Systems (ICCAS 2011), KINTEX, Gyeonggi-do, South Korea, 2011.

[3] M. S. Shbat, and V. Tuzlukov, "Generalized approach to signal processing in noise for closing vehicle detection application using FMCW radar sensor system," in Proc. International Radar Symposium (IRS 2011), Leipzig, Germany, pp.459-464, 2011.

[4] M. S. Shbat, J. H. Yi, and V. Tuzlukov," Signal processing for closing vehicle detection," in Proc. 2011 IEEE International Symposium on Antennas and Propagation (ISAP 2011), South Korea, 2011.

[5] H. Rohling, "Some Radar Topics: Waveform Design, Range CFAR and Target Recognition", Advances in Sensing With Security Applications NATO Security through Science Series, vol. 2, pp. 293-322, 2006.