Editors:
Prof. Nikos E. Mastorakis, Technical University of Sofia, BULGARIA
Prof. Valeri Mladenov, Technical University of Sofia, BULGARIA
Prof. Zoran Bojkovic, Technical University of Belgrade, SERBIA
Prof. Stamatios Kartalopoulos, University of Oklahoma, USA
Prof. Argyrios Varonides, University of Scranton, USA
Prof. Manoj Jha, University of Baltimore, USA

RECENT ADVANCES IN COMMUNICATIONS

Proceedings of the 13th WSEAS International Conference on COMMUNICATIONS

13th WSEAS CSCC Multiconference
Rodos (Rhodes) Island, Greece, July 23-25, 2009

Recent Advances in Electrical Engineering
A Series of Reference Books and Textbooks

ISBN: 978-960-474-098-7
ISSN: 1790-5117

Published by WSEAS Press
www.wseas.org

Recent Advances in Communications

Proceedings of the 13th WSEAS International Conference on COMMUNICATIONS (part of the 13th WSEAS CSCC Multiconference)

Rodos, Greece
July 23-25, 2009

Recent Advances in Electrical Engineering
A Series of Reference Books and Textbooks

Published by WSEAS Press
www.wseas.org

ISSN: 1790-5117
ISBN: 978-960-474-098-7

Recent Advances in Communications

Proceedings of the 13th WSEAS International Conference on COMMUNICATIONS

(part of the 13th WSEAS CSCC Multiconference)

Rodos, Greece, July 23-25, 2009

Recent Advances in Electrical Engineering
A Series of Reference Books and Textbooks

Published by WSEAS Press
www.wseas.org

Copyright © 2009, by WSEAS Press

All the copyright of the present book belongs to the World Scientific and Engineering Academy and Society Press. All rights reserved. No part of this publication may be reproduced, stored in a retrieval system, or transmitted in any form or by any means, electronic, mechanical, photocopying, recording, or otherwise, without the prior written permission of the Editor of World Scientific and Engineering Academy and Society Press.

All papers of the present volume were peer reviewed by two independent reviewers. Acceptance was granted when both reviewers' recommendations were positive.
See also: http://www.worldses.org/review/index.html

ISSN: 1790-5117
ISBN: 978-960-474-098-7

World Scientific and Engineering Academy and Society

Recent Advances in Communications

Proceedings of the 13th WSEAS International Conference on COMMUNICATIONS

(part of the 13th WSEAS CSCC Multiconference)

Rodos, Greece
July 23-25, 2009

Editors:

Prof. Nikos E. Mastorakis, Technical University of Sofia, BULGARIA
Prof. Valeri Mladenov, Technical University of Sofia, BULGARIA
Prof. Zoran Bojkovic, Technical University of Belgrade, SERBIA
Prof. Stamatios Kartalopoulos, University of Oklahoma, USA
Prof. Argyrios Varonides, University of Scranton, USA
Prof. Manoj Jha, University of Baltimore, USA

International Program Committee Members:

Hatim Aboalsamh SAUDI ARABIA
Abdel latif Abu Dalhoum JORDAN
Ana Maria Acu ROMANIA
Bazil Ahmed SPAIN
Atef Al-najjar SAUDI ARABIA
Mohammed Al-Rawi JORDAN
Antonios Andreatos GREECE
Vasile Anghel ROMANIA
Alla Anohina LATVIA
Nor Badrul Anuar MALAYSIA
Constantin Apostoaia USA
Carlo Artemi ITALY
Carlos Aviles-Cruz MEXICO
Rafic Bachnak UNITED STATES
Nadia Baeshen SAUDI ARABIA
Aldo Balestrino ITALY
Jerzy Balicki POLAND
Michael Bank ISRAEL
Rafael Barcena SPAIN
Brian A. Barsky UNITED STATES
Koldo Basterretxea SPAIN
George Bebis UNITED STATES
Babak Beheshti UNITED STATES
Dalibor Biolek CZECH REPUBLIC
Mauro Bisiacco ITALY
Carlos Bognar BRAZIL
Menouer Boubekeur IRELAND
Nikolaos Bourbakis UNITED STATES
Salvador Bracho SPAIN
Stefan Bruda CANADA
Bogdan Brumar ROMANIA
Cornelia Aida Bulucea ROMANIA
Martin Burke IRELAND
Osvaldo Cairo MEXICO
Jose Calderon-Martinez MEXICO
Catalin-Daniel Caleanu ROMANIA
Muresan Calin ROMANIA
David Carroll IRELAND
Daniela Carstea ROMANIA
Ion Carstea ROMANIA
Daniele Casali ITALY
Petr Cenek SLOVAKIA
Debasish Chakraborty JAPAN
Yuan-Chang Chang TAIWAN
Hsien-Tsung Chang TAIWAN
Chingmu Chen TAIWAN
Ching-Mu Chen TAIWAN
Yung-Yuan Chen TAIWAN
Guan-Yu Chen TAIWAN
Cunshe Chen CHINA
Yee Ming Chen TAIWAN
Jong-Shin Chen TAIWAN
Kuentai Chen TAIWAN
Ren-Chuen Chen TAIWAN
Chia-Hsin Cheng TAIWAN
Jui-Hung Chien TAIWAN
Lin Chin-Feng TAIWAN
Adrian Chioreanu ROMANIA
Daejea Cho KOREA
Yong Jun Choi KOREA
Iulian Ciocoiu ROMANIA
Laura Ciupala ROMANIA
Narcis Clara SPAIN
Guarnaccia Claudio ITALY
Jenica Ileana Corcau ROMANIA
Smaranda Adina Cosma ROMANIA
Giovanni Costantini ITALY
Mitica Craus ROMANIA
Brumar Cristina ROMANIA
Juan Cruz-Victoria MEXICO
Fernando Cuartero SPAIN
Karen Daniels UNITED STATES
Carlo dell'Aquila ITALY
Paolo Di Giamberardino ITALY
Madiagne Diallo BRAZIL
Eduardo Mario Dias BRAZIL
Juan R. Diaz SPAIN
Zeljko Djurovic SERBIA
Valentin Dogaru Ulieru ROMANIA
Antonio Dominguez SPAIN
Anastasios Drosopoulos GREECE
Silviu Dumitrescu ROMANIA
Daniel Dunea ROMANIA
Dan-Maniu Duse ROMANIA
Karl Edelmoser AUSTRIA
Hazem El-Bakry EGYPT
Nahed El-desouky EGYPT
Hamed Elsimary EGYPT
Farzin Emami IRAN
Popa Emil Marin ROMANIA
Ainhoa Etxebarria SPAIN
Ralf Fabian ROMANIA
Hamid Farrokhi IRAN
Lamia Fattouh SAUDI ARABIA
Humberto Fernandes BRASIL
Andres Ferreyra-Ramirez MEXICO

Cacovaen Florentina Laura ROMANIA
Caio Fernando Fontana BRAZIL
Rocco Furferi ITALY
Popa Gabriel Nicolae ROMANIA
Mircea Gabriela ROMANIA
Vasile Gheorghita Gaitan ROMANIA
Jennie Gallimore UNITED STATES
Subhashini Ganapathy UNITED STATES
Abdullah Gani MALAYSIA
Francisco Garcia SPAIN
Ioan Gavrilut ROMANIA
Vassilis Gekas GREECE
Shamsollah Ghanbari IRAN
Egils Ginters LATVIA
Luminita Giurgiu ROMANIA
Snezhana Gocheva-Ilieva BULGARIA
Roman Goot ISRAEL
Fabio Graziosi ITALY
Kieran Greer UNITED KINGDOM
Christopher Greiner Norway
Alaaeldin Hafez SAUDI ARABIA
Vladimir Hahanov UKRAINE
Daphne Halkias GREECE
Eric Harmsen PUERTO RICO
Marios Hatziprokopiou GREECE
Yung-fa Huang TAIWAN
Amjad Hudaib JORDAN
Humberto Humberto BRAZIL
Ammar Huneiti JORDAN
Daniel Hunyadi ROMANIA
Hanafizan Hussain MALAYSIA
Marilena Ianculescu ROMANIA
Mihaiela Iliescu SAINT LUCIA
Ilmars Iltins LATVIA
Sabin Ionel ROMANIA
Muhammad Irfan PAKISTAN
Mahmoud Iskandarani JORDAN
Takao Ito JAPAN
Ming-Shen Jian TAIWAN
Ioan Jivet ROMANIA
Chen Jong-Shin TAIWAN
Fukatani Junichi JAPAN
Panagiotis Kalagiakos GREECE
Michail Kalogiannakis GREECE
Marcin Kaminski POLAND
Amirrudin Kamsin MALAYSIA
Dimitrios Karras GREECE
Stamatios Kartalopoulos USA
Kazuki KATAGISHI JAPAN
Charalambos Katsidis GREECE
Norazlina Khamis MALAYSIA
H.Kijima JAPAN
Mi-Young Kim KOREA
Hyenki Kim KOREA
Young Beom Kim KOREA
Joohee Kim KOREA
Eugene Kindler CZECH REPUBLIC
Valentina Koliskina LATVIA
Zdenek Kolka CZECH REPUBLIC
Jitka Komarkova CZECH REPUBLIC
Dan Komosny CZECH REPUBLIC
Hana Kopackova CZECH REPUBLIC
Constantinos Koutsojannis GREECE
Guennadi Kouzaev NORWAY
Piyaporn Krachodnok THAILAND
Vladislavs Kremeneckis LATVIA
Dragana Krsti SERBIA
Cpalka Krzysztof POLAND
Urszula Ledzewicz UNITED STATES
Yong-Woo Lee KOREA
Chulhee Lee KOREA
Shih-Kai Lee TAIWAN
Bobrowski Leon POLAND
Muhai Li CHINA
Maozhen Li UNITED KINGDOM
Niculita Lidia ROMANIA
Ioan Lie ROMANIA
Chih-Min Lin TAIWAN
Che-Chern Lin TAIWAN
Yu-cheng Lin TAIWAN
Jaime Lloret SPAIN
Jonathan Loo UNITED KINGDOM
Rita Mahajan INDIA
Iraj Mahdavi IRAN
Zaigham Mahmood UNITED KINGDOM
Ahmed Mahmoud EGYPT
Viljan Mahnic SLOVENIA
Denis Mamaluy UNITED STATES
D. Manivannan UNITED STATES
Marius Marcu ROMANIA
Daniela Marinescu ROMANIA
Juan Marin-Garcia SPAIN
Castor Marino SPAIN
Evangelous Markopoulos GREECE
Denizar Cruz Martins BRAZIL
Boonruang Marungsri THAILAND
Hirano Masatake JAPAN
Ecaterina Matei ROMANIA
Keith Maycock IRELAND
Marketa Mazalkova CZECH REPUBLIC
Niaz ahmed Memon PAKISTAN
Valeri Mladenov BULGARIA
Bruno Monsuez FRANCE
Carmen Morato SPAIN
Kristina Moroz-Lapin LITHUANIA
Doru-Petru Munteanu ROMANIA
Zainol Mustafa MALAYSIA
Saravanan Muthaiyah UNITED STATES
Francesco Muzi ITALY
Ramu Naidoo SOUTH AFRICA
Mitsuteru Nakamura JAPAN
Yoshiki Nakamura JAPAN
Victor-Emil Neagoe ROMANIA
Mircea Neamtu ROMANIA

Dan Negoitescu ROMANIA
Wan-Lung Ng HONG KONG S.A.R.
Elena Niculescu ROMANIA
V.Niola ITALY
Roman Novak SLOVENIA
Alexandru Onea ROMANIA
Anant Oonsivilai THAILAND
J. Ordieres SPAIN
Zeynep Orhan TURKEY
Michael Orshansky UNITED STATES
Antonio Ostos VENEZUELA
Yelda OZEL TURKEY
Ramesh Pachar INDIA
Edson Pacheco Paladini BRAZIL
Spiros Panetsos GREECE
Manuela Panoiu ROMANIA
Maria Panta GREECE
Pietro Pantano ITALY
Thales Papazoglou GREECE
Michail Papoutsidakis GREECE
Hamed Parsiani PUERTO RICO
Rajendra Patrikar INDIA
Anca Petrisor ROMANIA
Gabriela Petropol Serb ROMANIA
Jacek Piskorowski POLAND
Nicola Pitrone ITALY
Petr Pivonka CZECH REPUBLIC
Agostino Poggi ITALY
Ioan Pop ROMANIA
Mihaela Popescu ROMANIA
Lip Yee Por MALAYSIA
Jacov Portnoy ISRAEL
Ioannis Pountourakis GREECE
Sasanka Prabhala UNITED STATES
Valeriu Prepelita ROMANIA
Anna PΘrez-MΘndez VENEZUELA
Ricardo Quiros SPAIN
Constanta Zoie Radulescu ROMANIA
Marius Radulescu ROMANIA
Monica Raileanu Szeles ROMANIA
Nazario Ramirez-Beltran PUERTO RICO
Mamun bin ibne Reaz MALAYSIA
Mario Refice ITALY
Rosa Maria Reis PORTUGAL
Erendira Rendon MEXICO
Angela Repanovici ROMANIA
Jerzy Respondek POLAND
Roberto Revetria ITALY
Rosula Reyes PHILIPPINES
Francklin Rivas VENEZUELA
Andras Rovid HUNGARY
Yuriy Rozanov RUSSIA
Jose de Jesus Rubio-Avila MEXICO
Sergey Ryvkin RUSSIA
Juan Sanchez-garcia MEXICO
Uziel Sandler ISRAEL
German Santos-Boada SPAIN
Charles Sarraf LEBANON
Ernst D. Schmitter GERMANY
Teruji Sekozawa JAPAN
Noel Y A Shammas UNITED KINGDOM
Subana Shanmuganathan NEW ZEALAND
Omar Shatnawi JORDAN
Hiromitsu Shimakawa JAPAN
Vairis Shtrauss LATVIA
Konstantinos Siassiakos GREECE
Dana Simian ROMANIA
Carmen Simion ROMANIA
Vladimir Simovic CROATIA (HRVATSKA)
Azzam Sleit Jordan
Florin Sofonea ROMANIA
Alexander Soiguine UNITED STATES
Deaconu Sorin Ioan ROMANIA
Arnd Steinmetz GERMANY
Florin Stoica ROMANIA
Milan Stork CZECH REPUBLIC
Sarawut Sujitjorn THAILAND
Kenneth Sundaraj MALAYSIA
Tsuyoshi Takayama JAPAN
Atushi Takeda JAPAN
Mihai Talu ROMANIA
Tan-Hsu Tan TAIWAN
Mamoru Tanaka
Hua Tang UNITED STATES
Kazuya Tanigawa
Horia Nicolai Teodorescu ROMANIA
Popescu Theodor Dan ROMANIA
A.Tinnirello ARGENTINA
Virgil Tiponut ROMANIA
Flavio Tonelli ITALY
Irina Topalova BULGARIA
Carlos Torre-Ferrero SPAIN
Dimitris Tsamatsoulis GREECE
Costas Tsatsoulis UNITED STATES
G. J. Tsekouras GREECE
Koki Tsukamoto JAPAN
Cristina Turcu ROMANIA
Vyacheslav Tuzlukov KOREA
Marius Ubostad NORWAY
C. Ungureanu ROMANIA
Olgierd Unold POLAND
Pavel Vaclavek CZECH REPUBLIC
Joseph Raj Vaidyanathan TURKEY
Argyrios Varonides UNITED STATES
Anca Vasilescu ROMANIA
Franck Vedrine FRANCE
Francisco J. Velasco SPAIN
D. Ventzas GREECE
Matei Vinatoru ROMANIA
Mirela-Catrinel Voicu ROMANIA
Konstantinos VOUDOURIS GREECE
Petros Voulgaris UNITED STATES
Maria Emilia Walter BRAZIL
He-Sheng Wang TAIWAN

Minoru Watanabe JAPAN
Liyuan Wei HONG KONG S.A.R.
Ralph Weissleder
R. Wongsan, THAILAND
Hong Wu CHINA
Zhang Xiang CHINA
Jianxi Yang CHINA
Kai Hau Yeung HONG KONG S.A.R.
E. A. Yfantis. USA
C. D Yfantis GREECE
Tetsuya Yoshida JAPAN
Masaya Yoshikawa JAPAN
Hirokazu Yoshizawa JAPAN
Shiang-Hwua Yu TAIWAN
Azami Zaharim MALAYSIA
Tomas Zelinka CZECH REPUBLIC
Rong Zhang JAPAN
Xinhui Zhang UNITED STATES
Sotirios Ziavras UNITED STATES
Stelios Zimeras GREECE
Dimitrios Zissopoulos GREECE
Natasa Zivic GERMANY
Zakaria Suliman Zubi LIBYA

Preface

This year the 13th WSEAS International Conference on COMMUNICATIONS was held in Rodos, Greece, in July 23-25, 2009. The Conference remains faithful to its original idea of providing a platform to discuss microwave theory and techniques, cad design for microwave systems, antennas and radars, lightwave technology, microwave acoustics, filter and passive components, microwave and antennas measurements, reflectors and lens antennas, arrays, scattering, propagation, diffraction etc. with participants from all over the world, both from academia and from industry.

Its success is reflected in the papers received, with participants coming from several countries, allowing a real multinational multicultural exchange of experiences and ideas.

The accepted papers of this conference are published in this Book that will be indexed by ISI. Please, check it: www.worldses.org/indexes as well as in the CD-ROM Proceedings. They will be also available in the E-Library of the WSEAS. The best papers will be also promoted in many Journals for further evaluation.

A Conference such as this can only succeed as a team effort, so the Editors want to thank the International Scientific Committee and the Reviewers for their excellent work in reviewing the papers as well as their invaluable input and advice.

The Editors

Table of Contents

Symbol Error Rate of Quadrature Subbranch Hybrid Selection/Maximal-Ratio Combining in Rayleigh Fading Under Employment of Generalized Detector

VYACHESLAV TUZLUKOV
School of Electrical Engineering and Computer Science
Kyungpook National University
1370 Sankyuk-dong, Buk-gu, Daegu 702-701
SOUTH KOREA
Email: tuzlukov@ee.knu.ac.kr

Abstract: - The symbol-error rate (SER) of a quadrature subbranch hybrid selection/maximal-ratio combining scheme for 1-D modulations in Rayleigh fading under employment of the generalized receiver, which is constructed based on the generalized approach to signal processing in noise, is investigated. At the generalized receiver, N diversity branches are split into $2N$ in-phase and quadrature subbranches. Traditional hybrid selection/maximal-ratio combining is then applied over $2N$ subbranches. M-ary pulse amplitude modulation, including coherent binary phase-shift keying (BPSK), with quadrature subbranch hybrid selection/maximal-ratio combining is investigated. The SER performance of the generalized receiver under quadrature subbranch hybrid selection/maximal-ratio combining and hybrid selection/maximal-ratio combining schemes are investigated and compared with the conventional hybrid selection/maximal-ratio combining receiver. The obtained results show that the generalized receiver with quadrature subbranch hybrid selection/maximal-ratio combining and hybrid selection /maximal-ratio combining schemes outperforms the traditional hybrid selection/maximal-ratio combining receiver.

Key Words: - Generalized detector, Diversity combining, Symbol error rate, Fading channel, Hybrid selection/maximal-ratio combining.

1 Introduction

In this paper we investigate the generalized receiver, which is constructed based on the generalized approach to signal processing in noise [1]–[5], under quadrature subbranch hybrid selection/maximal-ratio combining for 1-D modulations in Rayleigh fading and compare its symbol error rate (SER) performance with that of the traditional hybrid selection/maximal-ratio combining scheme discussed in [6]. It is well known that the hybrid selection/maximal-ratio combining receiver selects the L strongest signals from N available diversity branches and coherently combines them [7]–[13]. In traditional hybrid selection/maximal-ratio combining scheme, the strongest L signals are selected according to signal-envelope amplitude [7]–[13]. However, some receiver implementations recover directly the in-phase (I) and quadrature (Q) components of the received branch signals. Furthermore, optimal maximum likelihood estimation of the phase of a diversity branch signal is implemented by first estimating the in-phase and quadrature branch signal components and obtaining the signal phase as a derived quantity [14] and [15]. Other channel-estimation procedures also operate by first estimating the in-phase and quadrature branch signal components [16]–[18]. Thus, rather than N available signals, there are $2N$ available quadrature branch signal components for combining. In general, the largest $2L$ of these $2N$ quadrature branch signal components will not be the same as the $2L$ quadrature branch signal components of the L branch signals having the largest signal envelopes. In this paper, we investigate how much improvement in performance can be achieved by using the generalized receiver with modified hybrid selection/maximal-ratio combining, namely, with quadrature subbranch hybrid selection/maximal-ratio combining and hybrid selection/maximal-ratio combining schemes, instead of the conventional hybrid selection/maximal-ratio combining scheme for 1-D signal modulations in Rayleigh fading. At the generalized receiver, the N diversity branches are split into $2N$ in-phase and quadrature subbranches. Then the generalized receiver with hybrid selection/maximal-ratio combining scheme [19] is applied to these $2N$ subbranches. Obtained results show that the better performance is achieved by this quadrature subbranch hybrid selection/maximal-ratio combining scheme in comparison with the traditional hybrid selection/maximal-ratio combining scheme for the same va-

lue of average signal-to-noise ratio (SNR) per diversity branch.

2 System Model

We assume that there are N diversity branches experiencing slow and flat Rayleigh fading, and all of the fading processes are independent and identically distributed. During analysis we consider only the hypothesis H_1 "a yes" signal in the input stochastic process. Then the equivalent received baseband signal for the k-th diversity branch takes the following form:

$$x_k(t) = h_k a(t) + n_k(t), \quad k = 1,\ldots,N \ , \tag{1}$$

where $a(t)$ is a 1-D baseband transmitted signal that without loss of generality, is assumed to be real, h_k is the channel gain for the k-th branch subjected to Rayleigh fading, and $n_k(t)$ is a zero-mean white complex Gaussian noise process with two-sided power spectral density $\frac{N_0}{2}$ with the dimension $\frac{W}{Hz}$.

At the generalized receiver front end, for each diversity branch, the received signal is split into its in-phase and quadrature signal components. Then, the conventional hybrid selection/maximal-ratio combining scheme is applied over all of these quadrature branches, as shown in Fig.1. We can present h_k as

$$h_k = h_{kI} + jh_{kQ} \tag{2}$$

and $n_k(t)$ as

$$n_k(t) = n_{kI}(t) + jn_{kQ}(t) \ , \tag{3}$$

the in-phase signal component $x_{kI}(t)$ and quadrature signal component $x_{kQ}(t)$ of the received signal $x_k(t)$ are given by

$$x_{kI}(t) = h_{kI} a(t) + n_{kI}(t) \ , \tag{4}$$

$$x_{kQ}(t) = h_{kQ} a(t) + n_{kQ}(t) \ . \tag{5}$$

Since h_k $(k = 1,\ldots,N)$ are subjected to independent and identically distributed Rayleigh fading, h_{kI} and h_{kQ} are independent zero-mean Gaussian random variables with the same variance [20]

$$D_h = \frac{1}{2} M\{|h_k|^2\} \ . \tag{6}$$

Further, the in-phase $n_{kI}(t)$ and quadrature $n_{kQ}(t)$ noise components are also independent zero-mean Gaussian random processes, each with two-sided power spectral density $\frac{N_0}{2}$ with the dimension $\frac{W}{Hz}$ [14]. Due to the independence of in-phase h_{kI} and quadrature h_{kQ} channel gain components and in-phase $n_{kI}(t)$ and quadrature $n_{kQ}(t)$ noise components, the $2N$ quadrature branch received signal components conditioned on the transmitted signal are independent and identicallly distributed. We can reorganize the in-phase and quadrature components of the channel gains h_k and Gaussian noise n_k $(k = 1,\ldots,N)$ as g_k and v_k, given, respectively, by

$$g_k = \begin{cases} h_{kI}, & k = 1,\ldots,N \\ h_{(k-N)Q}, & k = N+1,\ldots,2N; \end{cases} \tag{7}$$

$$v_k = \begin{cases} n_{kI}(t), & k = 1,\ldots,N \\ n_{(k-N)Q}(t), & k = N+1,\ldots,2N. \end{cases} \tag{8}$$

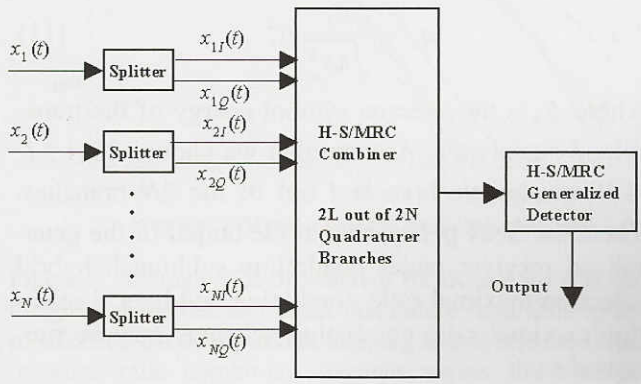

Figure 1.Block diagram of the generalized receiver under quadrature subbranch hybrid selection/maximal-ratio combining and hybrid selection/maximal-ratio combining schemes.

The signal at the output of the generalized receiver with quadrature subbranch hybrid selection/maximal-ratio combining and hybrid selection/maximal-ratio combining schemes takes the following form:

$$Z^g_{QBHS/MRC}(t) = s^2(t)\sum_{k=1}^{2N} c_k^2 g_k^2 + \sum_{k=1}^{2N} c_k^2 g_k^2 [v_k^{*2}(t) - v_k^2(t)] \tag{9}$$

where $v_k^{*2}(t) - v_k^2(t)$ is the background noise forming at the output of the generalized detector for the k-th branch;

$$v_k^* = \begin{cases} n_{kI}^*(t), & k = 1,\ldots,N \\ n_{(k-N)Q}^*(t), & k = N+1,\ldots,2N; \end{cases} \tag{10}$$

$n_k^*(t)$ is the reference zero-mean white complex Gaussian noise process with two-sided power spectral density $\frac{N_0}{2}$ with the dimension $\frac{W}{Hz}$ introduced according

to the generalized approach to signal processing in noise [1]–[5]; $c_k \in \{0,1\}$ and $2L$ of c_k equal to 1.

3 Performance Analysis

3.1 Symbol Error Rate Expression

Let q_k denote the instantaneous signal-to-noise ratio per symbol of the k-th quadrature branch ($k = 1,\ldots, 2N$) at the output of the generalized receiver under quadrature subbranch hybrid selection/maximal-ratio combining and hybrid selection/maximal-ratio combining schemes. In line with [2], this instantaneous signal-to-noise ratio (SNR) q_k can be defined as

$$q_k = \frac{E_b}{\sqrt{4\sigma_n^4}} g_k^2 \ , \tag{11}$$

where E_b is the average symbol energy of the transmitted signal $a(t)$. Assume that we choose $2L$ ($1 \le L \le N$) quadrature branched out of the $2N$ branches. Then, the SNR per symbol at the output of the generalized receiver under quadrature subbranch hybrid selection/maximal-ratio combining and hybrid selection/maximal-ratio combining schemes may be presented as

$$q_{QBHS/MRC} = \sum_{k=1}^{2L} q_{(k)} \ , \tag{12}$$

where $q_{(k)}$ are the ordered instantaneous SNRs q_k and satisfy the following condition

$$q_{(1)} \ge q_{(2)} \ge \cdots \ge q_{(2N)} \ . \tag{13}$$

When $L = N$, we obtain the maximal-ratio combiner, as expected.

Using the moment generating function method discussed in [11] and [21], the SER of an M-ary pulse amplitude modulation (PAM) system conditioned on $q_{QBHS/MRC}$ is given by

$$P_s(q_{QBHS/MRC}) = \frac{2(M-1)}{M\pi} \times \int_0^{0.5\pi} \exp\left(-\frac{g_{M-PAM}}{\sin^2\theta} q_{QBHS/MRC}\right) d\theta \ , \tag{14}$$

where

$$g_{M-PAM} = \frac{3}{M^2-1} \ . \tag{15}$$

Averaging (14) over $q_{QBHS/MRC}$, the SER of the M-ary pulse amplitude modulation system is determined in the following form:

$$P_s = \frac{2(M-1)}{M\pi} \times \int_0^{0.5\pi}\int_0^{\infty} \exp\left(-\frac{g_{M-PAM}}{\sin^2\theta} q\right) f_{q_{QBHS/MRC}}(q)\,dq\,d\theta = \frac{2(M-1)}{M\pi} \int_0^{0.5\pi} \varphi_{q_{QBHS/MRC}}\left(-\frac{g_{M-PAM}}{\sin^2\theta}\right) d\theta \ , \tag{16}$$

where

$$\varphi_q(s) = M_q\{\exp(sq)\} \tag{17}$$

is the moment generating function of random variable q, $M_q\{\cdot\}$ is the mathematical expectation of the moment generating function with respect to SNR per symbol.

When $M = 2$, the average bit error rate of a coherent binary phase-shift keying (BPSK) system using the quadrature subbranch hybrid selection/maximal-ratio combining and hybrid selection/maximal-ratio combining schemes can be determined in the following form:

$$P_b = \frac{1}{\pi} \int_0^{0.5\pi} \varphi_{q_{QBHS/MRC}}\left(-\frac{1}{\sin^2\theta}\right) d\theta \ . \tag{18}$$

3.2 Moment Generating Function of $q_{QBHS/MRC}$

Since all of the $2N$ quadrature branches are independent and identically distributed, the moment generating function of $q_{QBHS/MRC}$ takes the following form [13]:

$$\varphi_{q_{QBHS/MRC}}(s) = 2L\binom{2N}{2L} \times \int_0^{0.5\pi} \exp(sq) f(q) [\varphi(s,q)]^{2L-1} [F(q)]^{2(N-L)} dq \ , \tag{19}$$

where $f(q)$ and $F(q)$ are, respectively, the probability density function and the cumulative distribution function of q, the SNR per symbol, for each quadrature branch, and

$$\varphi(s,q) = \int_q^{\infty} \exp(sx) f(x)\,dx \tag{20}$$

is the marginal moment generating function of the SNR per symbol of a single quadrature branch.

Since g_k and g_{k+N} ($k = 1,\ldots,N$) follow a zero-mean Gaussian distribution with the variance D_h given by (6), one can show that q_k and q_{k+N} follow the Gamma distribution with probability density function given by [20]

$$f(q)=\begin{cases}\frac{1}{\sqrt{q}}\exp(-\frac{q}{\beta})\sqrt{\pi\bar{q}}\,, & q\geq 0\\ 0\,, & q\leq 0\,,\end{cases} \tag{21}$$

where

$$\bar{q}=\frac{2E_aD_h}{\sqrt{4\sigma_n^4}} \tag{22}$$

is the average SNR per symbol for each diversity branch. Then the marginal moment generating function of the SNR per symbol of a single quadrature branch can be determined in the following form:

$$\varphi(s,q)=\frac{1}{\sqrt{1-s\bar{q}}}erfc\left(\sqrt{\frac{1-s\bar{q}}{\bar{q}}}q\right) \tag{23}$$

and the cumulative distribution function of q becomes

$$F(q)=1-\varphi(0,q)=1-erfc\left(\sqrt{\frac{q}{\bar{q}}}\right)\,, \tag{24}$$

where

$$erfc\,(x)=\frac{2}{\sqrt{\pi}}\int_x^{\infty}\exp(-t^2)dt \tag{25}$$

is the error function.

4 Simulation Results

In this section we discuss some examples of the performance of the generalized detector under quadrature subbranch hybrid selection/maximal-ratio combining and hybrid selection/maximal-ratio combining schemes and compare with the conventional hybrid selection/maximal-ratio combining receiver. The average SER of coherent BPSK and 8-PAM signals under processing by the generalized detector with quadrature subbranch hybrid selection/maximal-ratio combining and hybrid selection/maximal-ratio combining schemes as a function of average SNR per symbol per diversity branch for various values of $2L$ and $2N=8$ is presented in Fig.2. It is seen that the performance of the generalized detector with quadrature subbranch hybrid selection/maximal-ratio combining and hybrid selection/maximal-ratio combining schemes with $(L,N)=(3,4)$ achieves virtually the same performance as the generalized detector with traditional maximal-ratio combining, and that the performance with $(L,N)=(2,4)$ is typically less than 0.5 dB in SNR poorer than the generalized detector with traditional maximal-ratio combining in [19]. Also, a comparison with the traditional hybrid selection/maximal-ratio combining receiver [6] is made. Advantage

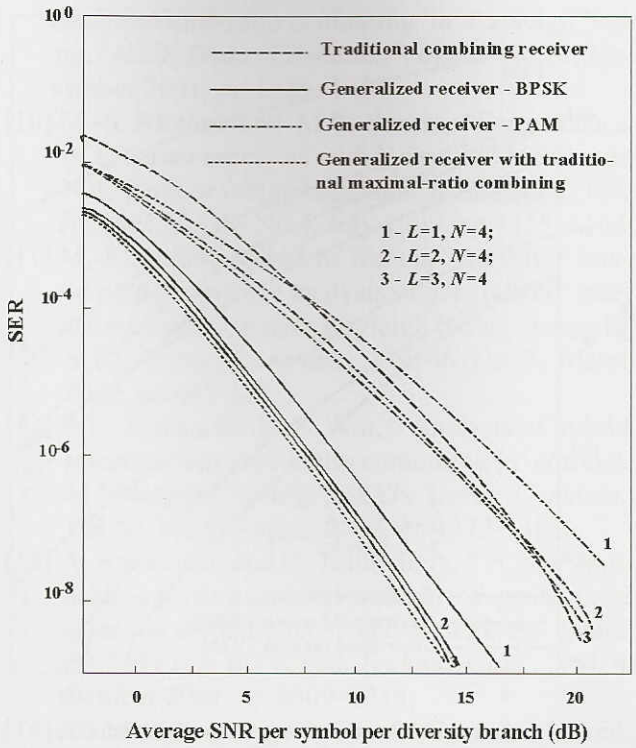

Figure 2. Average SER of coherent BPSK and 8-PAM for the generalized detector under quadrature subbranch hybrid selection/maximal-ratio combining and hybrid selection /maximal-ratio combining schemes versus the average SNR per symbol per diversity for various values of $2L$ with $2N=8$.

of using the generalized detector is evident. Average SER of coherent BPSK and 8-PAM signals under processing by the generalized detector with quadrature subbranch hybrid selection/maximal-ratio combining and hybrid selection/maximal-ratio combining schemes as a function of average SNR per symbol per diversity branch for various values of $2N$ with $2L=4$ is shown in Fig.3. We note the substantial benefits of increasing the number of diversity branches N for fixed L. Comparison with the traditional hybrid selection/maximal-ratio combining receiver is made. Advantage of using the generalized detector is evident. Comparative analysis of the average bit error rate (BER) as a function of the average SNR per bit per diversity branch of coherent BPSK signals under the use of the generalized detector with quadrature subbranch hybrid selection/maximal-ratio combining and hybrid selection/maximal-ratio combining schemes and the generalized detector with traditional hybrid selection/maximal-ratio combining scheme for various values of L with $N=8$ is presented in Fig.4. To achieve the same value of average SNR per bit per diversity branch, we should choose $2L$ quadrature

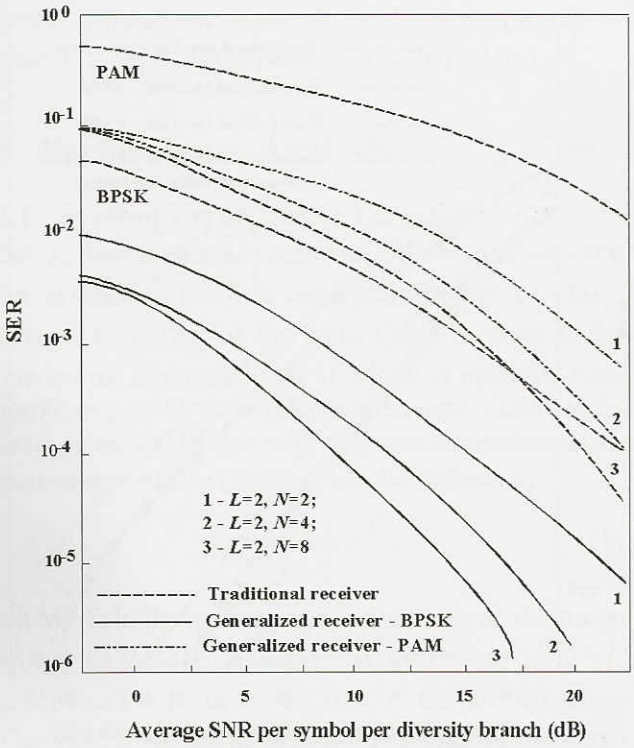

Figure 3. Average SER of coherent BPSK and 8-PAM for the generalized detector under quadrature subbranch hybrid selection/maximal-ratio combining and hybrid selection/maximal-ratio combining schemes versus the average SNR per symbol per diversity for various values of $2N$ with $2L = 4$.

branches for the generalized detector with quadrature subbranch hybrid selection/maximal-ratio combining and hybrid selection/ maximal-ratio combining schemes and L diversity branches for the generalized detector with traditional hybrid selection/maximal-ratio combining scheme. Figure 4 shows that the performance of the generalized detector with quadrature subbranch hybrid selection/maximal-ratio combining and hybrid selection/ maximal-ratio combining schemes is much better than that of the generalized detector with traditional hybrid selection/maximal-ratio combining scheme, about 0.5 dB to 1.2 dB when L is less than one half N. This difference decreases with increasing L. This is expected because when $L = N$ we obtain the same performance. Some discussion of the increases in generalized receiver complexity and power consumption is in order. We first note that the generalized detector with quadrature subbranch hybrid selection/maximal-ratio combining and hybrid selection/maximal-ratio combining schemes requires the same number of antennas as the generalized detector with traditional hybrid selection/maximal-ratio combining scheme. On the other hand, the former requires twice as many comparators as the latter, to select the best signals for further processing. However, the generalized receiver designs that process the quadrature signal components will require $2L$ receiver chains for either the generalized detector with quadrature subbranch hybrid selection/maximal-ratio combining and hybrid selection/maximal-ratio combining schemes or the generalized detector with traditional hybrid selection/maximal-ratio combining scheme. Such receiver designs will use only little additional power, as the generalized receiver chains consume much more power than the comparators. On the other hand, the generalized receiver designs that implement co-phasing of the branch signals without splitting the branch signals into the quadrature components will require L receiver chains for the generalized detector with traditional hybrid selection/maximal-ratio combining scheme and $2L$ receiver chains for the generalized detector with quadrature subbranch hybrid selection/maximal-ratio combining and hybrid selection/maximal-ratio combining schemes, with corresponding hardware and power consumption increases.

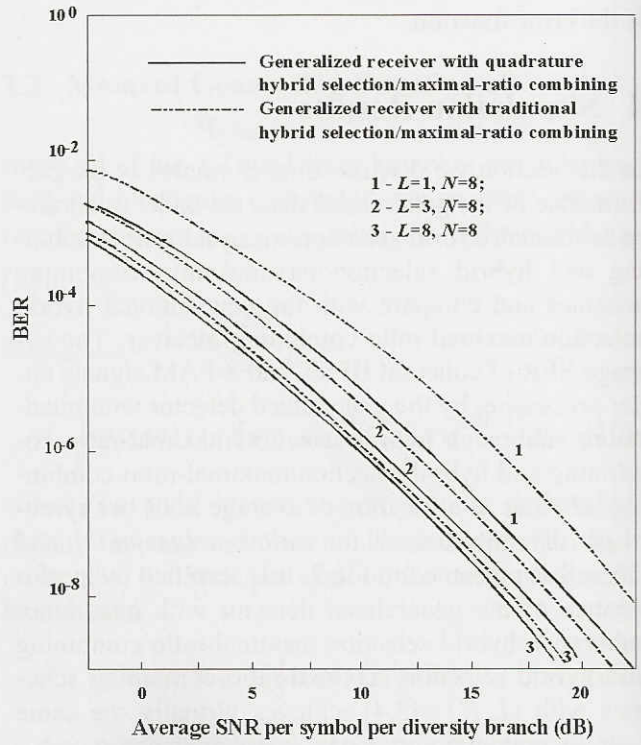

Figure 4. Comparison of the average BER of coherent BPSK and 8-PAM for the generalized detector under quadrature subbranch hybrid selection/maximal-ratio combining and hybrid selection/maximal-ratio combining schemes for various values of $2L$ with $N = 8$.

5 Conclusions

In this paper, the performance of the generalized detector with quadrature subbranch hybrid selection/ maximal-ratio combining and hybrid selection/maximal-ratio combining schemes for 1-D signal modulations in Rayleigh fading was investigated. The symbol error rate of M-ary pulse amplitude modulation, including coherent BPSK modulation, was derived. Results show that the generalized detector with quadrature subbranch hybrid selection/maximal-ratio combining and hybrid selection/maximal-ratio combining schemes performs substantially better than the generalized detector with traditional hybrid selection/ maximal-ratio combining scheme, particularly when L is smaller than one half N, and much better than the traditional hybrid selection/maximal-ratio combining receiver.

Acknowledgment

This research was supported by Kyungpook National University Research Grant 2009.

References:

[1] V.Tuzlukov, *Signal Processing in Noise: A New Methodology*, IEC, Minsk, 1998, 328 pp.

[2] V.Tuzlukov, *Signal Detection Theory*, Springer-Verlag, New York, 2001, 744 pp.

[3] V.Tuzlukov, *Signal Processing Noise*, CRC Press Boca Raton, New York, Washington, D.C. London, 2002, 692 pp.

[4] V.Tuzlukov, *Signal and Image Processing in Navigational Systems*, CRC Press, Boca Raton, New York, Washington, D.C., London, 2004, 636 pp.

[5] V.Tuzlukov,"A new approach to signal detection theory", *Digital Signal Processing: A Review Journal*, Vol.8, No. 3, July 1998, pp. 166–184.

[6] Xiaodi Zhang and N.C. Beaulieu, "Error rate of quadrature subbranch hybrid selection/maximal-ratio combining in Rayleigh fading", *IEEE Trans Commun.*,Vol.55,No.2,February2007,pp.247–250

[7] N. Kong and L.B. Milstein, "Average SNR of a generalized diversity selection combining scheme", *IEEE Commun. Lett.*, Vol.3, No.3, March 1999, pp. 57–59.

[8] M.X. Win and J.H. Winters, "Analysis of hybrid selection/maximal ratio combining in Rayleigh fading," *IEEE Trans. Commun.*, Vol. 47, No. 12, December 1999, pp.1773–1776.

[9] M.Z. Win and J.H. Winters, "Virtual branch analysis of symbol error probability for hybrid selection/maximal-ratio combining in Rayleigh fading," *IEEE Trans. Commun.*, Vol.49, No.11, November 2001, pp.1926–1934.

[10] M.-S. Alouini and M.K. Simon, "Performance of coherent receivers with hybrid SC/MRC over Nakagami-*m* fading channels,"*IEEE Trans. Veh. Technol.*,Vol.48,No.4, July 1999, pp.1155–1164.

[11] M.-S. Alouini and M.K. Simon, "An MGF-based on performance analysis of generalized selection combining over Rayleigh fading channels" *IEEE Trans. Commun.*, Vol. 48, No. 3, March 2000, pp.401-415.

[12] R.K. Malik and M.Z. Win, " Analysis of hybrid selection/maximal-raatio combining in correlated Nakagami fading," *IEEE Trans. Commun.*, Vol.50, No.8, August 2002, pp.1372-1383.

[13] A. Annamalai and C. Tellambura, " A new approach to performance evaluation of generalized selection diversity receivers in wireless channels," in *Proc. IEEE Veh. Technol. Conf.*, Vol. 4, October 2001, pp.2309–2313.

[14] J.G. Proakis, *Digital Communications*, 4th ed. New York: McGraw-Hill, 2001.

[15] U. Mengali and A.N.D. Andrea, *Synchronization Techniques for Digital Receivers,* New York: Plenum, 1997.

[16] L Tong and S. Perreau, "Multichannel blind identification: From subspace to maximal likelihood methods," in *Proc. IEEE*, Vol.86, No.10, October 1998, pp.1951–1968.

[17] J.K. Tugnait, L. Tong, and Z. Ding, "Single-user channel estimation and equalization," *IEEE Signal Process. Mag.*, Vol.17, No.3, May 2000, pp. 17–28.

[18] K. Abed-Meraim, W. Qaiu, and Y. Hua, "Blind system identification," in *Proc. IEEE*, Vol.85, No.8, August 1997, pp.1310–1322.

[19] V. Tuzlukov, W.-S.Yoon, and Y.D. Kim, "Wireless sensor networks based on the generalized approach to signal processing with fading channels and receive antenna array," *WSEAS Trans. Circ. and Syst.*,Iss.10,Vol.3,December 2004, pp. 2149–2155.

[20] A. Papoulis and S.U. Pillai, *Probability, Random Variables and Stochastic Processes*, 4th ed. New York: McGraw-Hill, 2002.

[21] M.-S Alouini and A.J. Goldsmith, "A unified approach for calculating error rates of linearly modulated signals over generalized fading channels," *IEEE Trans. Commun.*, Vol.47, No.9, September 1999, pp.1324–1334